DRAWINGS

FOR

INTUITECH
FLOCCULATION & SEDIMENTATION MODULE S600
PROJECT 1684

FOR

INSTALLATION

RELEASE #1

APRIL 5, 2021

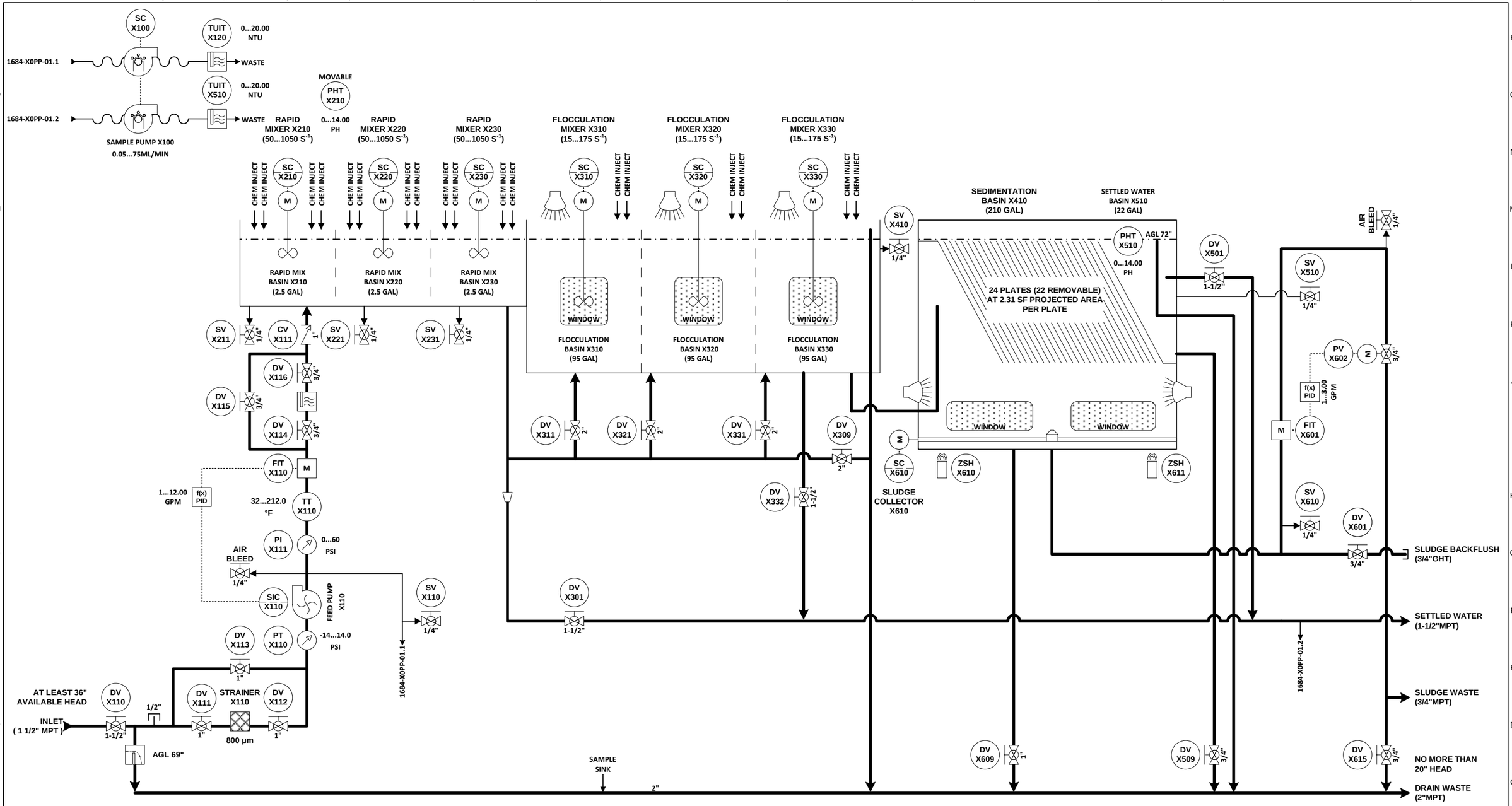

REV	DATE	BY	DESCRIPTION
1	03-15-21	AJB	MODIFIED DEVICE RANGES ON MIXERS & FLOW TRANSMITTERS, ADDED AGL'S
2			
3			
4			

Intuitech®
www.intuitech.com

THIS DRAWING IS THE INTELLECTUAL PROPERTY OF INTUITECH AND MAY NOT BE REPRODUCED IN FULL OR IN PART FOR ANY PURPOSE ASIDE FROM THE PROJECT AS SPECIFIED ON THIS DOCUMENT

DIMENSIONAL TOLERANCES ARE AS FOLLOWS, UNLESS OTHERWISE SPECIFIED

FRAC: ± 1/16 0.XX: ± 0.01

ANGLES: ± 1° 0.XXX: ± 0.005

TITLE: FLOCCULATION & SEDIMENTATION MODULE PROCESS & INSTRUMENTATION DIAGRAM - PROCESS

CLIENT: INTUITECH	PROJECT: 1684
DRAWN BY: AJB	DRAWN DATE: 02-09-21
DRAWING NAME: 1684-X0PP-01	P.O.:
SCALE: NONE	REVISION: 1

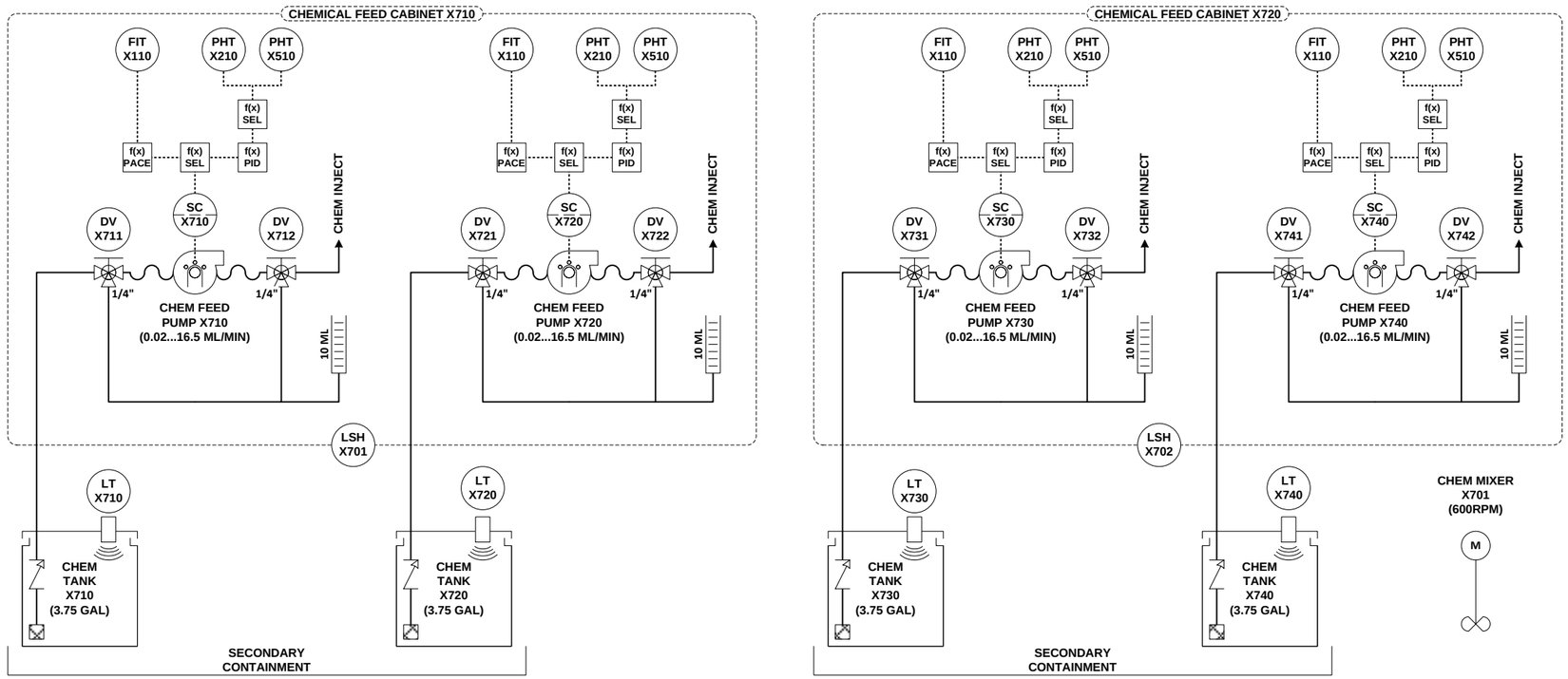

REV	DATE	BY	DESCRIPTION
1			
2			
3			
4			

Intuitech®
www.intuitech.com

THIS DRAWING IS THE INTELLECTUAL PROPERTY OF INTUITECH AND MAY NOT BE REPRODUCED IN FULL OR IN PART FOR ANY PURPOSE ASIDE FROM THE PROJECT AS SPECIFIED ON THIS DOCUMENT

DIMENSIONAL TOLERANCES ARE AS FOLLOWS, UNLESS OTHERWISE SPECIFIED

FRAC: ± 1/16 0.XX: ± 0.01
ANGLES: ± 1° 0.XXX: ± 0.005

TITLE: FLOCCULATION & SEDIMENTATION MODULE
PROCESS & INSTRUMENTATION DIAGRAM - CHEMICAL

CLIENT: INTUITECH	PROJECT: 1684
DRAWN BY: AJB	DRAWN DATE: 02-09-21
DRAWING NAME: 1684-X0PP-02	P.O.:
SCALE: NONE	REVISION: 0

DEVICE SYMBOLS

- FIELD MOUNTED DEVICE
- ENCLOSURE MOUNTED DEVICE
- BACKPLANE MOUNTED DEVICE
- PROGRAMMABLE OPERATOR INTERFACE (ENCLOSURE MOUNTED)
- PROGRAMMABLE LOGIC CONTROLLER (BACKPLANE MOUNTED)

MISCELLANEOUS

- MINOR PROCESS LINE
- MAJOR PROCESS LINE
- ELECTRICAL SIGNAL
- WATER SURFACE
- DOUBLE WALL PIPE
- MAJOR ARROW
- MINOR ARROW
- ?? PROCESS VALUE POINT
- DRAIN WITH AIR BREAK
- PROCESS BOUNDARY
- SO CONDUIT SEAL-OFF

INSTRUMENTATION

- VARIABLE AREA FLOWMETER
- PADDLE WHEEL/ TURBINE FLOWMETER
- M MAGNETIC FLOWMETER
- L LAMINAR FLOWMETER
- VORTEX SHEDDING FLOWMETER
- T THERMAL DISPERSION FLOWMETER
- ULTRASONIC LEVEL DEVICE
- OPTICAL DISTANCE TRANSMITTER
- FLOAT LEVEL DEVICE
- SIGHT LEVEL DEVICE
- GUIDED WAVE RADAR LEVEL DEVICE
- PRESSURE DEVICE
- CAPACITIVE LEVEL DEVICE

PROCESS EQUIPMENT

- M ELECTRIC MIXER
- HEAT EXCHANGER
- HEATER
- STATIC MIXER
- PIPE WEIR WITH AIR BREAK
- EDUCTOR
- FILTER / STRAINER
- COALESCING FILTER
- ORIFICE PLATE
- RUPTURE DISK
- PRESSURE GAUGE ISOLATOR
- PIPE REDUCER
- FLOW THROUGH CELL
- INSPECTION LIGHT

PUMPS/ BLOWERS

- BLOWER
- CENTRIFUGAL PUMP
- DIAPHRAGM PUMP
- FLEXIBLE IMPELLER PUMP
- BI-DIRECTIONAL FLEXIBLE IMPELLER PUMP
- PERISTALTIC PUMP
- PROGRESSIVE CAVITY PUMP
- ROTARY LOBE PUMP
- GEAR PUMP
- COMPRESSOR

CONTROL FUNCTIONS

- f(x) PID PROPORTIONAL, INTEGRAL & DERIVATIVE
- f(x) PACE FLOW PACING
- f(x) SUB SUBTRACTION
- f(x) PWM PULSE WIDTH MODULATION
- f(x) CALC CALCULATION
- f(x) SEL SELECTION
- f(x) SUM SUMMATION
- f(x) MUX MULTIPLEXER
- f(x) TRIM TRIM
- f(x) LIM SET POINT LIMITING

VALVES

- NEEDLE VALVE
- BUTTERFLY VALVE
- BALL VALVE
- CHECK VALVE
- GLOBE VALVE
- DIAPHRAGM VALVE
- GATE VALVE
- 3-WAY BALL VALVE
- 3-WAY GENERAL VALVE
- PLUG VALVE
- GENERAL VALVE
- AIR RELIEF VALVE
- VACUUM RELIEF VALVE
- PRESSURE / SAFETY RELIEF VALVE

CONTROL PHILOSOPHY

- SEQUENCER STEP
- DECISION
- OPERATOR INPUT
- PROCESS
- REFERENCE TO A DIFFERENT PAGE
- IF CONDITION IS TRUE CONTINUE

ACTUATORS

- PRESSURE REGULATING ACTUATOR
- AIR-TO-OPEN/ SPRING TO CLOSE ACTUATOR
- AIR-TO-OPEN/ AIR-TO-CLOSE ACTUATOR
- AIR-TO-CLOSE/ SPRING-TO-OPEN ACTUATOR
- M ELECTRIC ACTUATOR
- S SOLENOID ACTUATOR
- HAND ACTUATOR
- LEVEL ACTUATOR

REV	DATE	BY	DESCRIPTION
1			
2			
3			
4			

Intuitech®
www.intuitech.com

THIS DRAWING IS THE INTELLECTUAL PROPERTY OF INTUITECH AND MAY NOT BE REPRODUCED IN FULL OR IN PART FOR ANY PURPOSE ASIDE FROM THE PROJECT AS SPECIFIED ON THIS DOCUMENT

DIMENSIONAL TOLERANCES ARE AS FOLLOWS, UNLESS OTHERWISE SPECIFIED

FRAC: ± 1/16 0.XX: ± 0.01

ANGLES: ± 1° 0.XXX: ± 0.005

TITLE: PROCESS & INSTRUMENTATION DIAGRAM SYMBOL LEGEND	
CLIENT:	PROJECT:
DRAWN BY:	DRAWN DATE:
DRAWING NAME: 0000-XXRL-01.VSD	P.O.:
SCALE: NONE	REVISION:

INPUT DEVICE TAG PREFIXES

PARAMETER	ELEMENT / SENSOR	INDICATOR	TRANSMITTER		SWITCH	
			BLIND	INDICATING	HIGH	LOW
AMMONIUM	AME	AMI	AMT	AMIT	AMSH	AMSL
ANALYTICAL (UNSPECIFIED)	AE	AI	AT	AIT	ASH	ASL
CHLORINE	CHE	CHI	CHT	CHIT	CHSH	CHSL
TOTAL CHLORINE	TCHE	TCHI	TCHT	TCHIT	TCHSH	TCHSL
CONDUCTIVITY	CE	CI	CT	CIT	CSH	CSL
CURRENT	CUE	CUI	CUT	CUIT	CUSH	CUSL
DISSOLVED OXYGEN	DOE	DOI	DOT	DOIT	DOSH	DOSL
FLOW RATE	FE	FI	FT	FIT	FSH	FSL
FLOW TOTALIZER	FQE	FQI	FQT	FQIT	FQSH	FQSL
HARDNESS	HE	HI	HT	HIT	HSH	HSL
HYDROGEN SULFIDE	HSE	HSI	HST	HSIT	HSSH	HSSL
LEVEL	LE	LI	LT	LIT	LSH	LSL
LOWER EXPLOSION LIMIT	LELE	LELI	LELT	LELIT	LELH	LELL
NITROGEN	NE	NI	NT	NIT	NSH	NSL
ORP	ORE	ORI	ORT	ORIT	ORSH	ORSL
OXYGEN	OXE	OXI	OXT	OXIT	OXSH	OXSL
OZONE	OZE	OZI	OZT	OZIT	OZSH	OZSL
PARTICLE	PCE	PCI	PCT	PCIT	PCSH	PCSL
PH	PHE	PHI	PHT	PHIT	PHSH	PHSL
POSITION	ZE	ZI	ZT	ZIT	ZSH	ZSL
POWER	PWE	PWI	PWT	PWIT	PWSH	PWSL
POWER TOTALIZER	PWQE	PWQI	PWQT	PWQIT	PWQSH	PWQSL
PRESSURE	PE	PI	PT	PIT	PSH	PSL
PRESSURE DIFFERENTIAL	PDE	PDI	PDT	PDIT	PDSH	PDSL
RESISTIVITY	RE	RI	RT	RIT	RSH	RSL
RELATIVE HUMIDITY	RHE	RHI	RHT	RHIT	RHSH	RHSL
SPEED	SE	SI	ST	SIT	SSH	SSL
STREAMING CURRENT	SCE	SCI	SCT	SCIT	SCSH	SCSL
SUSPENDED SOLIDS	SSE	SSI	SST	SSIT	SSSH	SSSL
TEMPERATURE	TE	TI	TT	TIT	TSH	TSL
TIME TOTALIZER	TQE	TQI	TQT	TQIT	TQSH	TQSL
TOTAL ORGANIC CARBON	TCE	TCI	TCT	TCIT	TCSH	TCSL
TURBIDITY	TUE	TUI	TUT	TUIT	TUSH	TUSL
UV ABSORPTION OR TRANSMITTANCE	UVE	UVI	UVT	UVIT	UVSH	UVSL
VOLTAGE	VE	VI	VT	VIT	VSH	VSL
WEIGHT / FORCE	WE	WI	WT	WIT	WSH	WSL

ALARM DEVICE TAG PREFIXES

PARAMETER	HIGH	LOW
AMMONIUM	AMAH	AMAL
ANALYTICAL (UNSPECIFIED)	AAH	AAL
CHLORINE	CHAH	CHAL
TOTAL CHLORINE	TCHAH	TCHAL
CONDUCTIVITY	CAH	CAL
CURRENT	CUAH	CUAL
DISSOLVED OXYGEN	DOAH	DOAL
FLOW RATE	FAH	FAL
FLOW TOTALIZER	FQAH	FQAL
HARDNESS	HAH	HAL
HYDROGEN SULFIDE	HSAH	HSAL
LEVEL	LAH	LAL
LOWER EXPLOSION LIMIT	LELH	LELL
NITROGEN	NAH	NAL
OXYGEN	OXAH	OXAL
OZONE	OZAH	OZAL
PARTICLE	PCAH	PCAL
PH	PHAH	PHAL
POWER	PWAH	PWAL
POWER TOTALIZER	PWQAH	PWQAL
PRESSURE	PAH	PAL
PRESSURE DIFFERENTIAL	PDAH	PDAL
RESISTIVITY	RAH	RAL
RELATIVE HUMIDITY	RHAH	RHAL
SPEED	SAH	SAL
STREAMING CURRENT	SCAH	SCAL
SUSPENDED SOLIDS	SSAH	SSAL
TEMPERATURE	TAH	TAL
TIME TOTALIZER	TQAH	TQAL
TOTAL ORGANIC CARBON	TCAH	TCAL
TURBIDITY	TUAH	TUAL
UV ABSORPTION	UVAH	UVAL
VOLTAGE	VAH	VAL
WEIGHT / FORCE	WAH	WAL

OUTPUT DEVICE TAG PREFIXES

DESCRIPTION	TAG
CHECK VALVE	CV
DISCRETE VALVE (OPEN/CLOSED)	DV
INJECTION VALVE	IV
PILOT VALVE	YV
PRESSURE REGULATOR	PR
PROPORTIONAL VALVE (MODULATING)	PV
RELIEF VALVE	RV
SAMPLE VALVE	SV

CONTROL DEVICE TAG PREFIXES

DESCRIPTION	TAG
FLOW CONTROLLER	FC
FLOW INDICATING CONTROLLER	FIC
PRESSURE CONTROLLER	PC
PRESSURE INDICATING CONTROLLER	PIC
SPEED CONTROLLER	SC
SPEED INDICATING CONTROLLER (VFD)	SIC
TEMPERATURE CONTROLLER	TC
TEMPERATURE INDICATING CONTROLLER	TIC

REV	DATE	BY	DESCRIPTION
1			
2			
3			
4			

Intuitech®
www.intuitech.com

THIS DRAWING IS THE INTELLECTUAL PROPERTY OF INTUITECH AND MAY NOT BE REPRODUCED IN FULL OR IN PART FOR ANY PURPOSE ASIDE FROM THE PROJECT AS SPECIFIED ON THIS DOCUMENT

DIMENSIONAL TOLERANCES ARE AS FOLLOWS, UNLESS OTHERWISE SPECIFIED

FRAC: ± 1/16 0.XX: ± 0.01

ANGLES: ± 1° 0.XXX: ± 0.005

TITLE: DEVICE TAG LEGEND

CLIENT:

PROJECT:

DRAWN BY:

DRAWN DATE:

DRAWING NAME: 0000-XXRL-02.VSD

P.O.:

SCALE: NONE

REVISION: 0

ELECTRICAL

- WIRING PROVIDED BY OTHERS
- INTERNAL WIRING OR COMPONENTS
- NON-WIRE JUMPERS
- STRANDED COPPER WIRE
- TWISTED PAIR CABLE WITH SHIELD & DRAIN
- MOLDED CABLE
- SPECIAL CABLE
- INTEGRAL CABLE
- CAT5E CABLE
- PANEL — PANEL BOUNDARY
- DEVICE AND COMPONENT BOUNDARIES
- VFD — VARIABLE FREQUENCY DRIVE
- SO — SEAL-OFF CONNECTOR
- SPD — SURGE PROTECTION DEVICE
- ? A — LOAD
- ? HP — MOTOR
- TRANSFORMER
- SHIELD
- PLUG CONNECTOR
- INLINE CONNECTOR (SPLICE, WIRE NUT, ETC)
- GROUND
- X — TERMINAL
- COIL
- C — LIGHT WITH COLOR
- CIRCUIT BREAKER
- FUSE
- NORMALLY OPEN CONTACT
- NORMALLY CLOSED CONTACT
- OVERLOAD RELAY
- RESISTOR
- VARISTOR
- CAPACITOR
- HAND-OFF-AUTO SWITCH
- TWO POSITION SWITCH
- FLOW SWITCH
- LIQUID LEVEL SWITCH
- TEMPERATURE SWITCH
- NORMALLY OPEN PUSH-BUTTON
- NORMALLY CLOSED PUSH-BUTTON
- LINE REACTOR
- SIGNAL POLE SWITCH
- PRESSURE SWITCH
- WIRELESS LINK

REV	DATE	BY	DESCRIPTION
1			
2			
3			
4			

Intuitech®
www.intuitech.com

THIS DRAWING IS THE INTELLECTUAL PROPERTY OF INTUITECH AND MAY NOT BE REPRODUCED IN FULL OR IN PART FOR ANY PURPOSE ASIDE FROM THE PROJECT AS SPECIFIED ON THIS DOCUMENT

DIMENSIONAL TOLERANCES ARE AS FOLLOWS, UNLESS OTHERWISE SPECIFIED

FRAC: ± 1/16 0.XX: ± 0.01
ANGLES: ± 1° 0.XXX: ± 0.005

TITLE: ELECTRICAL SYMBOL LEGEND	
CLIENT:	PROJECT:
DRAWN BY:	DRAWN DATE:
DRAWING NAME: 0000-XXRL-03.VSD	P.O.:
SCALE: NONE	REVISION: 0

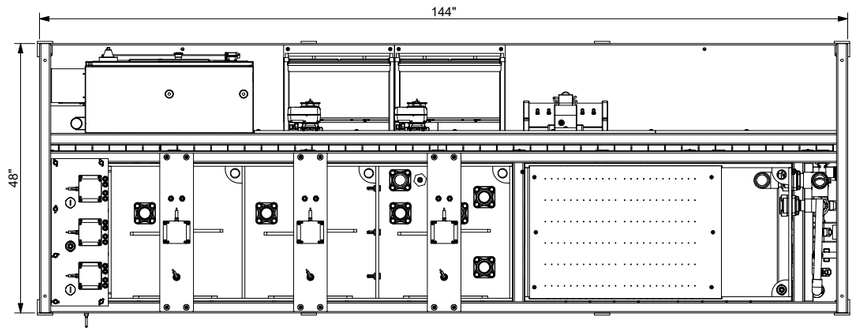

TOP VIEW

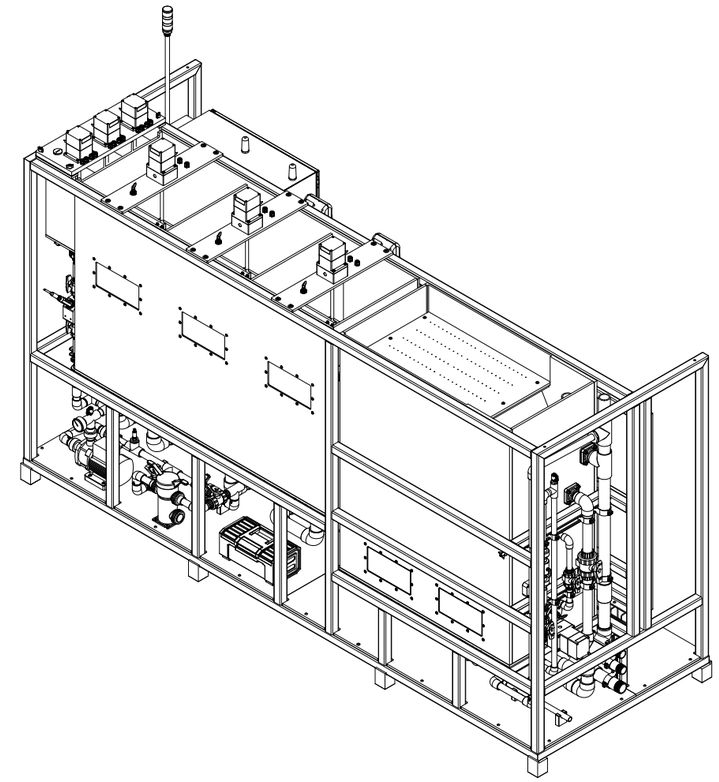

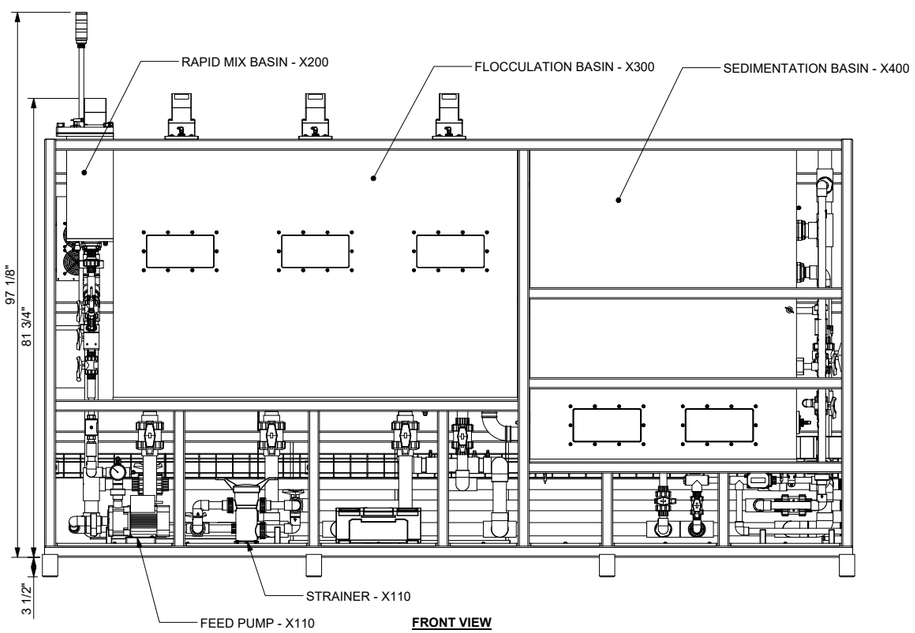

FRONT VIEW

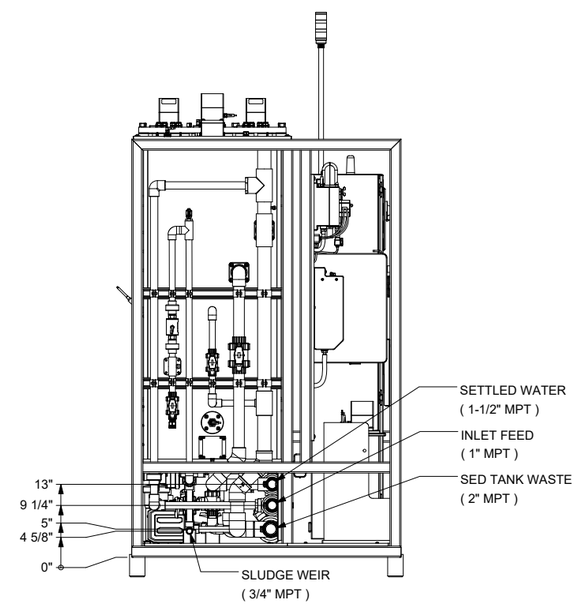

RIGHT VIEW

NOTES:

1. ESTIMATED DRY WEIGHT: 2,800 LBS
2. ESTIMATED WET WEIGHT: 6,600 LBS
3. ESTIMAYED SHIPING WEIGHT: 3,120 LBS

REV	DATE	BY	CHECKED	DESCRIPTION
1				
2				
3				
4				

Intuitech®
www.intuitech.com

THIS DRAWING IS THE INTELLECTUAL PROPERTY OF INTUITECH AND MAY NOT BE REPRODUCED IN FULL OR IN PART FOR ANY PURPOSE ASIDE FROM THE PROJECT SPECIFIED ON THIS DOCUMENT

DIMENSIONAL TOLERANCES ARE AS FOLLOWS UNLESS OTHERWISE SPECIFIED

FRAC: ±1/16 0.XX: ±0.01
ANGLES: ±1° 0.XXX: ±0.005

TITLE: FLOCCULATION & SEDIMENTATION MODULE - S600
FLOCCULATION SEDIMENTATION MODULE - GENERAL ARRANGEMENT

CLIENT: INTUITECH
PROJECT: 1684
DRAWN BY: DGW
DRAWN DATE: 2/3/2021
DRAWING NAME: 1684-X0GA-01
P.O.:
SCALE: NONE
REVISION: 0

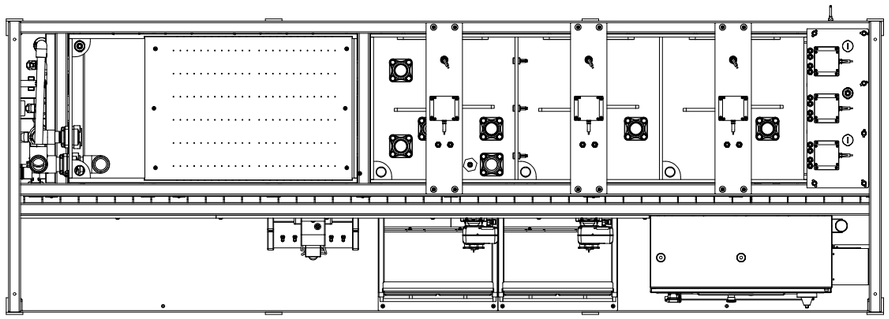

TOP VIEW

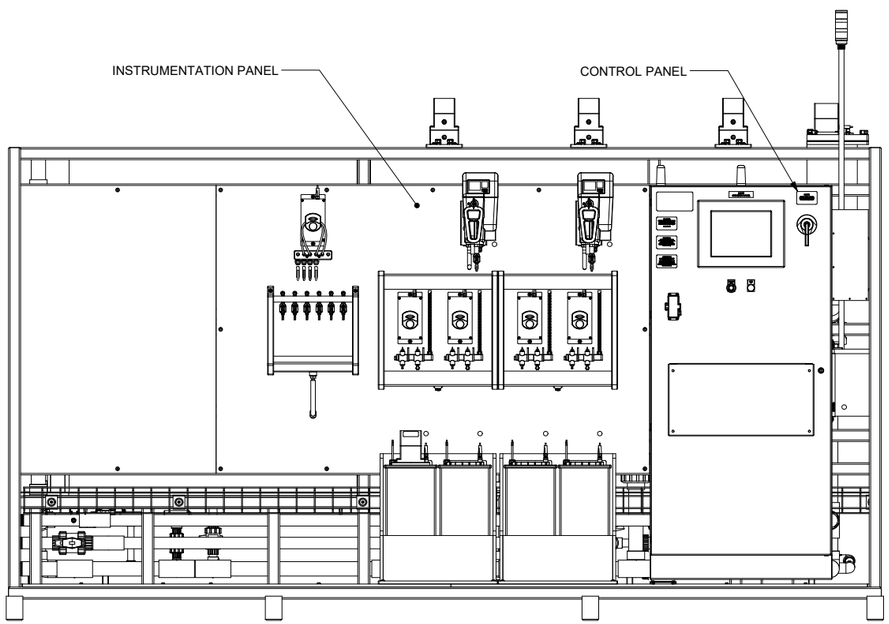

BACK VIEW

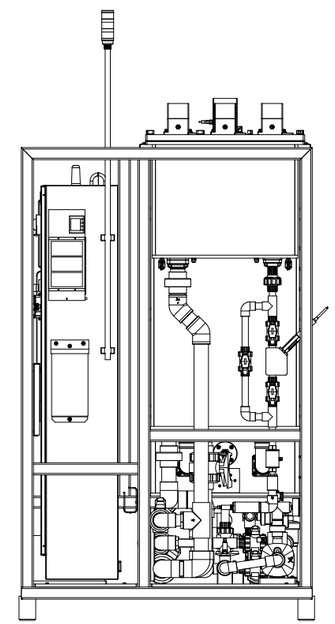

RIGHT VIEW

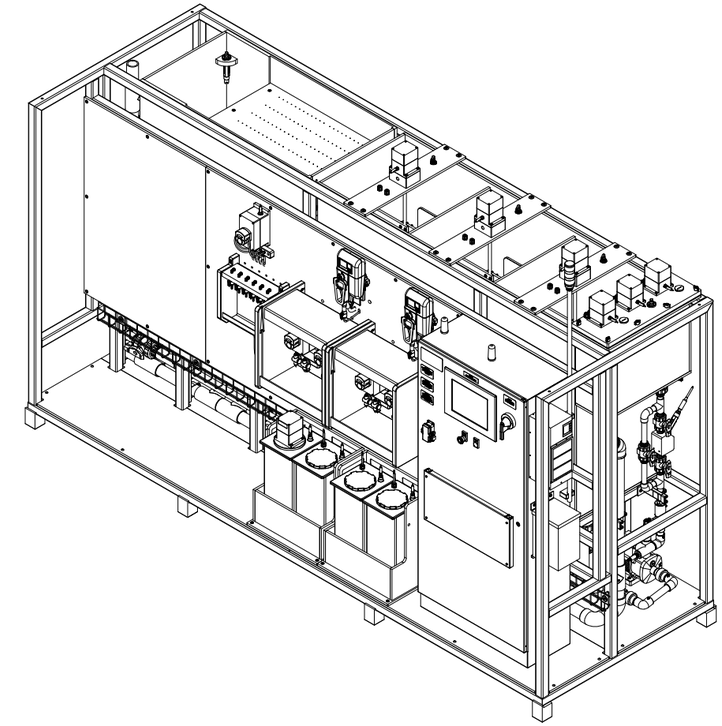

REV	DATE	BY	CHECKED	DESCRIPTION
1				
2				
3				
4				

Intuitech
www.intuitech.com

THIS DRAWING IS THE INTELLECTUAL PROPERTY OF INTUITECH AND MAY NOT BE REPRODUCED IN FULL OR IN PART FOR ANY PURPOSE ASIDE FROM THE PROJECT SPECIFIED ON THIS DOCUMENT

DIMENSIONAL TOLERANCES ARE AS FOLLOWS UNLESS OTHERWISE SPECIFIED

FRAC: ±1/16 0.XX: ±0.01

ANGLES: ±1° 0.XXX: ±0.005

TITLE: FLOCCULATION & SEDIMENTATION MODULE - S600
FLOCCULATION SEDIMENTATION MODULE - GENERAL ARRANGEMENT

CLIENT: INTUITECH	PROJECT: 1684
DRAWN BY: DGW	DRAWN DATE: 2/3/2021
DRAWING NAME: 1684-X0GA-02	P.O.:
SCALE: NONE	REVISION: 0

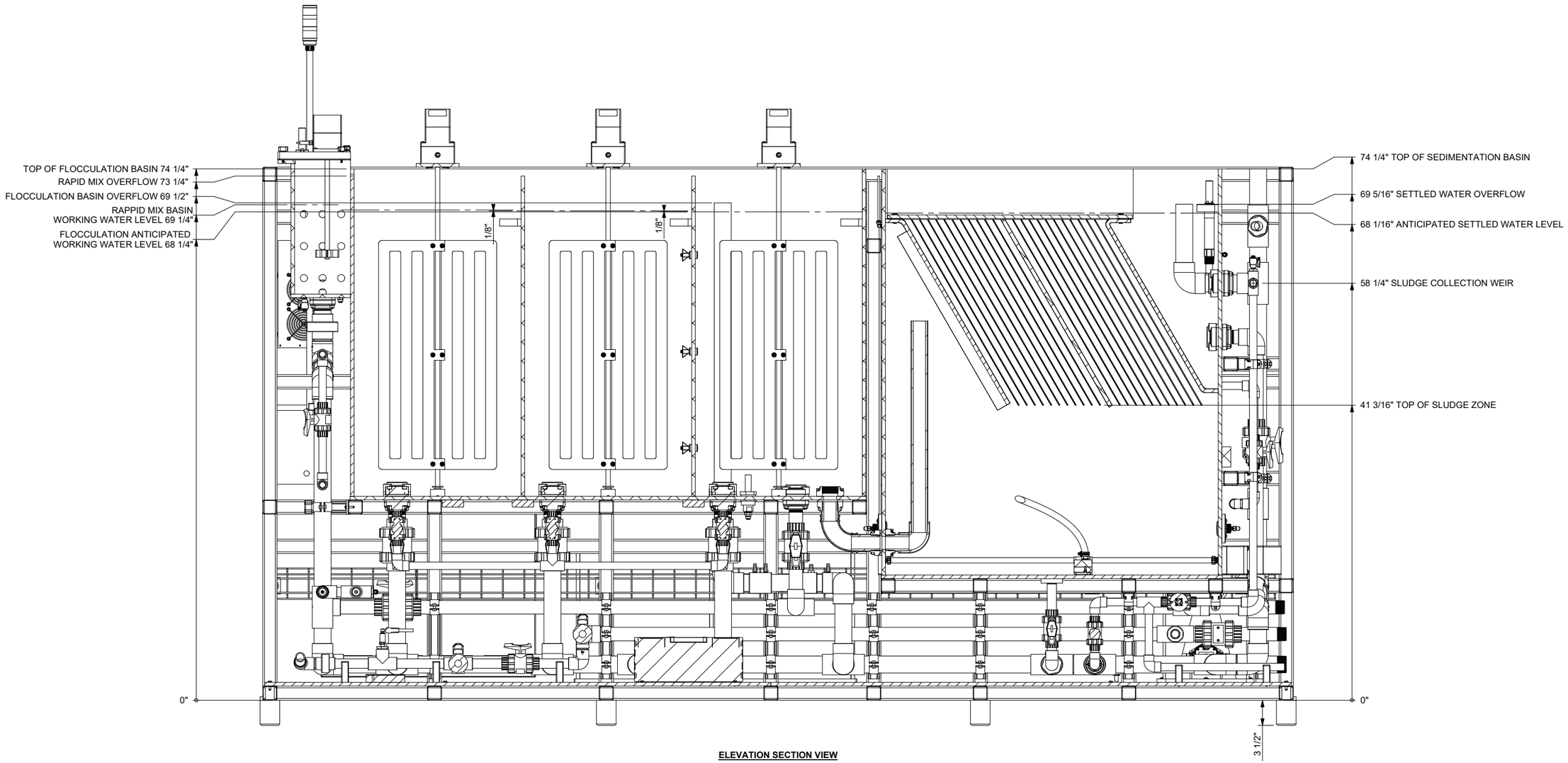

ELEVATION SECTION VIEW

REV	DATE	BY	CHECKED	DESCRIPTION
1				
2				
3				
4				

Intuitech®
www.intuitech.com

THIS DRAWING IS THE INTELLECTUAL PROPERTY OF INTUITECH AND MAY NOT BE REPRODUCED IN FULL OR IN PART FOR ANY PURPOSE ASIDE FROM THE PROJECT SPECIFIED ON THIS DOCUMENT

DIMENSIONAL TOLERANCES ARE AS FOLLOWS UNLESS OTHERWISE SPECIFIED

FRAC: ±1/16 0.XX: ±0.01
ANGLES: ±1° 0.XXX: ±0.005

TITLE: FLOCCULATION & SEDIMENTATION MODULE - S600
FLOCCULATION SEDIMENTATION MODULE - ELEVATION

CLIENT: INTUITECH
PROJECT: 1684
DRAWN BY: DGW
DRAWN DATE: 2/3/2021
DRAWING NAME: 1684-X0GA-03
P.O.:
SCALE: NONE
REVISION: 0

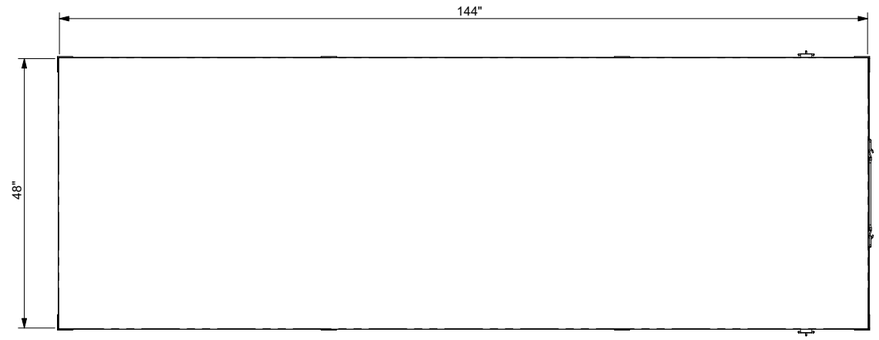

TOP VIEW

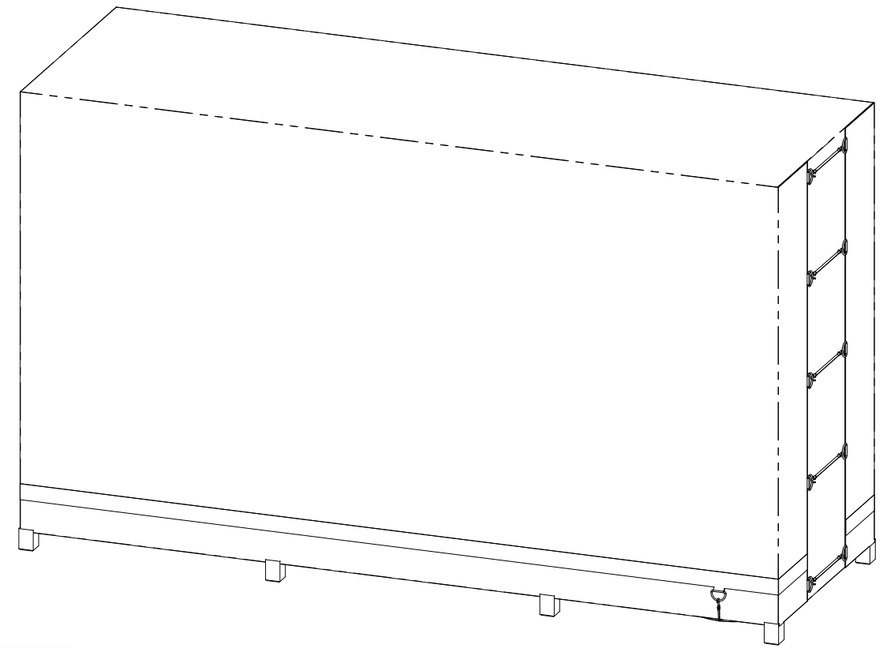

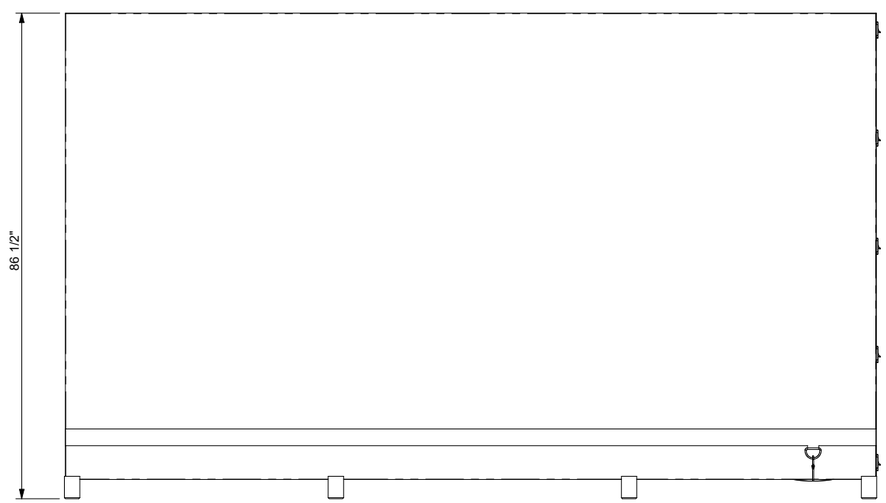

FRONT VIEW

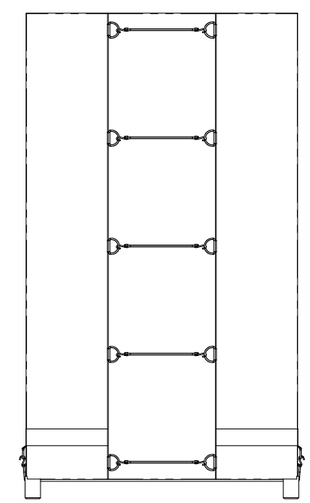

RIGHT VIEW

REV	DATE	BY	CHECKED	DESCRIPTION
1				
2				
3				
4				

Intuitech®
www.intuitech.com

THIS DRAWING IS THE INTELLECTUAL PROPERTY OF INTUITECH AND MAY NOT BE REPRODUCED IN FULL OR IN PART FOR ANY PURPOSE ASIDE FROM THE PROJECT SPECIFIED ON THIS DOCUMENT

DIMENSIONAL TOLERANCES ARE AS FOLLOWS UNLESS OTHERWISE SPECIFIED

FRAC: ±1/16 0.XX: ±0.01
ANGLES: ±1° 0.XXX: ±0.005

TITLE: FLOCCULATION & SEDIMENTATION MODULE - S600 FLOCCULATION SEDIMENTATION MODULE - SHIPPING	
CLIENT: INTUITECH	PROJECT: 1684
DRAWN BY: DGW	DRAWN DATE: 2/3/2021
DRAWING NAME: 1684-X0GA-04	P.O.:
SCALE: NONE	REVISION: 0

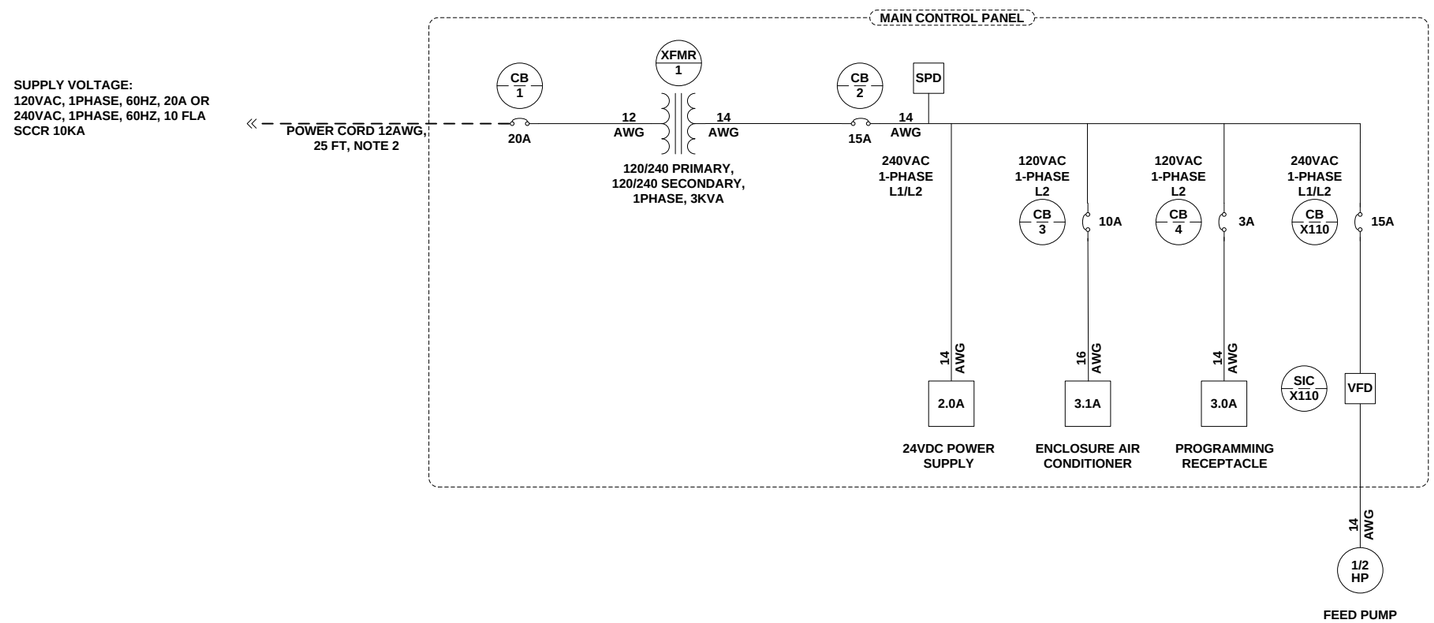

NOTES:
1. THE AVAILABLE SHORT CIRCUIT CURRENT SUPPLIED TO THIS EQUIPMENT SHALL NOT EXCEED THE MARKED SHORTCIRCUIT CURRENT RATING (SCCR) OF THIS EQUIPMENT
2. NEMA 5-20P (120 VAC) OR NEMA 6-15 (240 VAC)

REV	DATE	BY	DESCRIPTION
1			
2			
3			
4			

Intuitech®
www.intuitech.com

THIS DRAWING IS THE INTELLECTUAL PROPERTY OF INTUITECH AND MAY NOT BE REPRODUCED IN FULL OR IN PART FOR ANY PURPOSE ASIDE FROM THE PROJECT AS SPECIFIED ON THIS DOCUMENT

DIMENSIONAL TOLERANCES ARE AS FOLLOWS, UNLESS OTHERWISE SPECIFIED

FRAC: ± 1/16 0.XX: ± 0.01
ANGLES: ± 1° 0.XXX: ± 0.005

TITLE: FLOC/SED MODULE MAIN CONTROL PANEL ONE LINE DIAGRAM

CLIENT: INTUITECH	PROJECT: 1684
DRAWN BY: BNL	DRAWN DATE: 02-09-21
DRAWING NAME: 1684-X0LD-01	P.O.:
SCALE: NONE	REVISION: 0